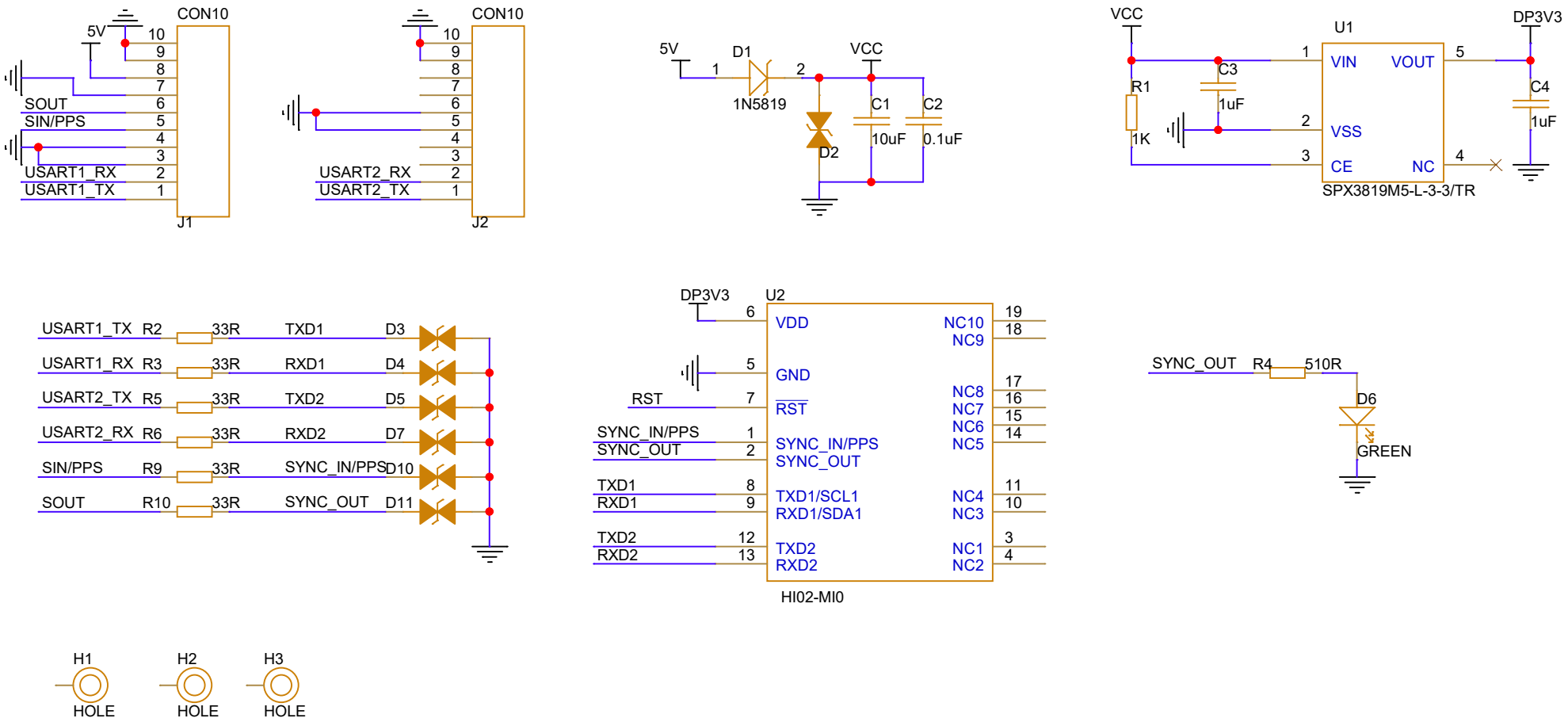

Title	EVAL HI02		
Size A	Document Number 1		Rev A0
Date: Thursday, July 10, 2025		Sheet 1 of 1	